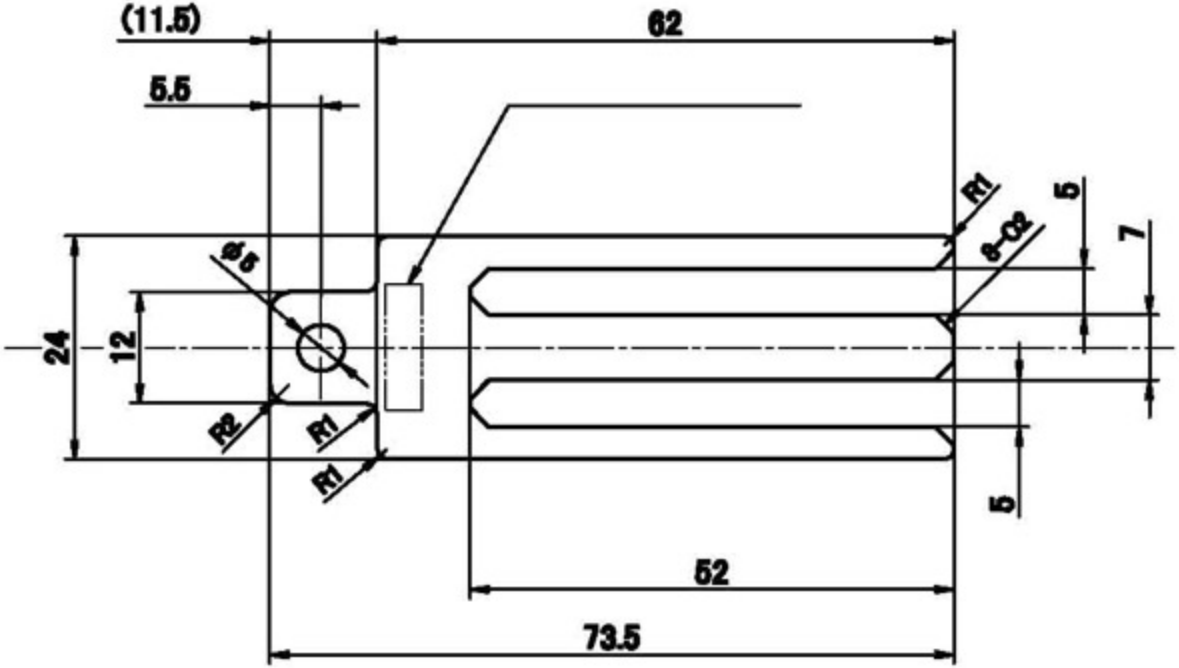
(11.5)
62
5.5
R1
5
7
8-C2
ø6
24
12
R2
R1
R1
5
52
73.5