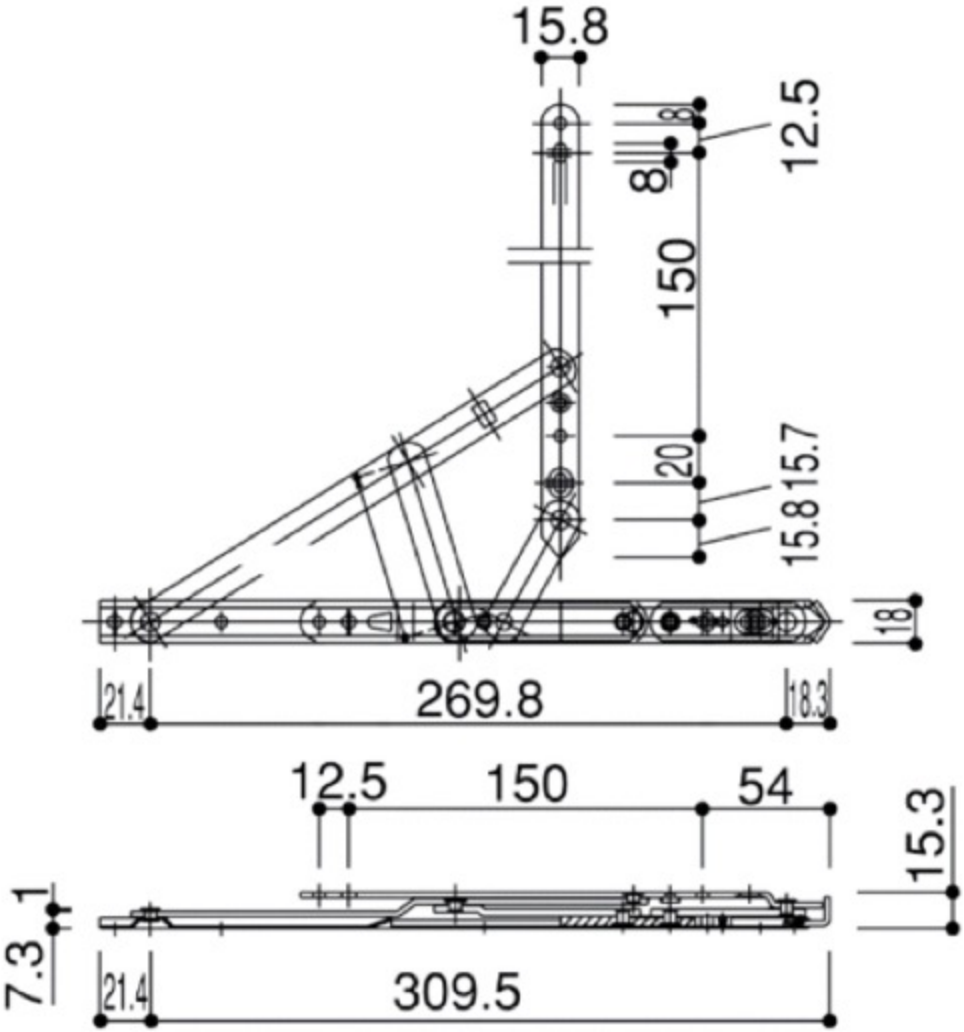
15.8
12.5
8
8
150
20
15.7
15.8
18
21.4
269.8
18.3
12.5
150
54
15.3
1
7.3
21.4
309.5