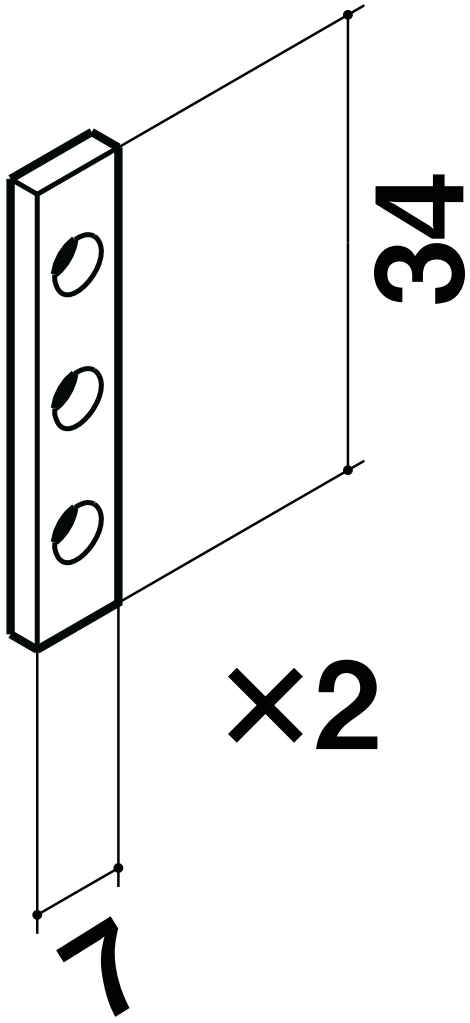
34
×2
7

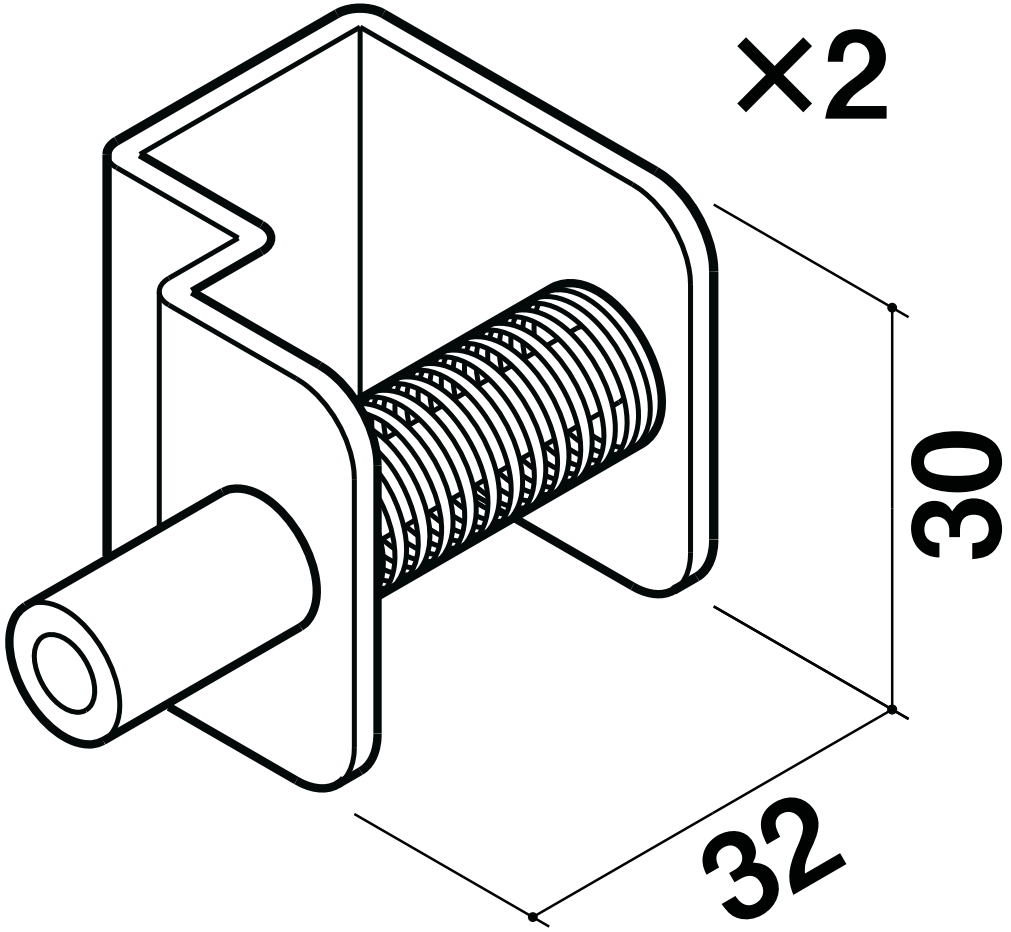
×2
30
32