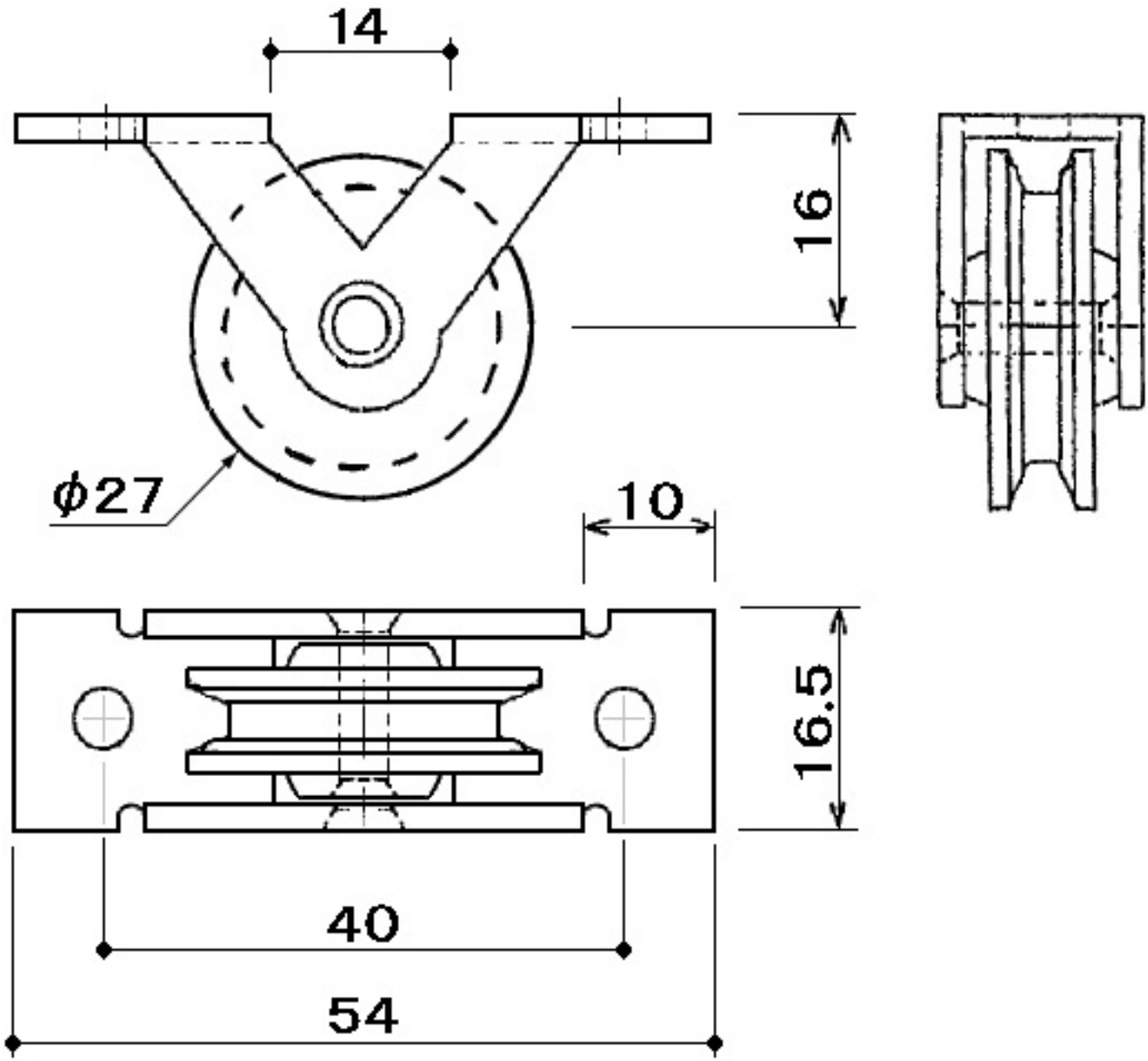
14
16
φ27
10
16.5
40
54