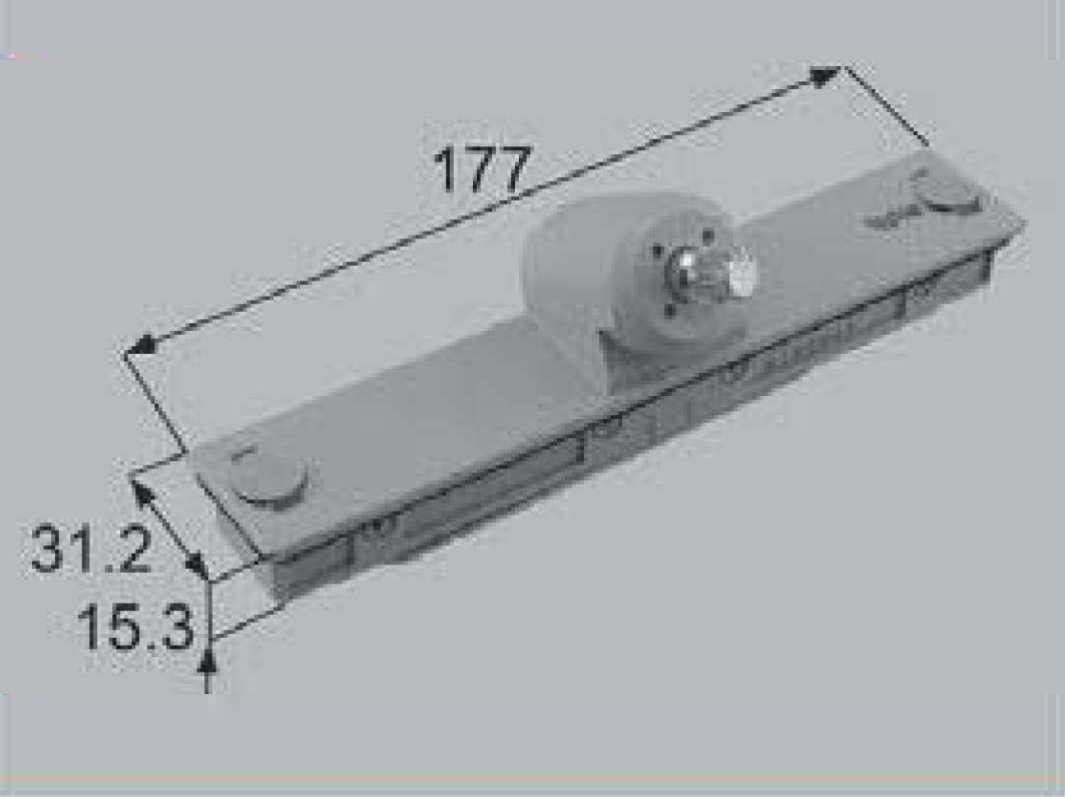
177
31.2
15.3