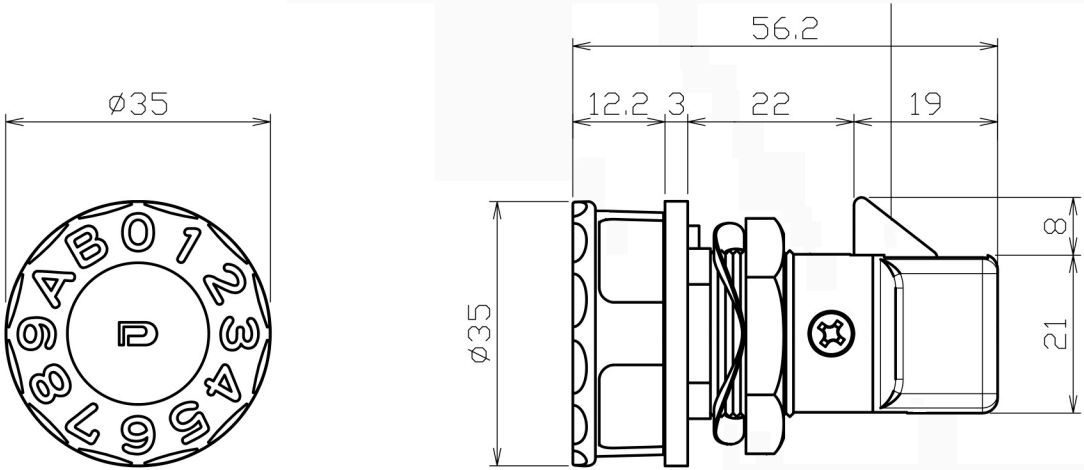
ø35
0
1
2
3
4
5
6
7
8
9
A
B
D
56.2
12.2
3
22
19
8
21
ø35