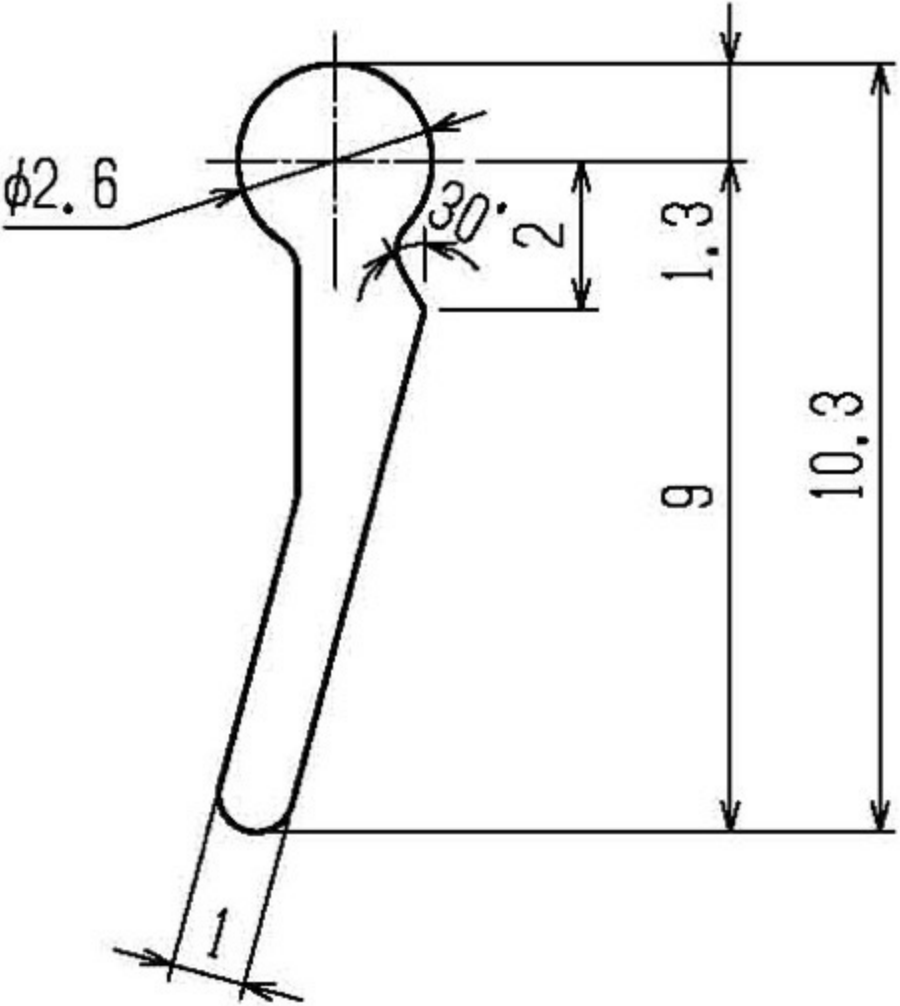
ϕ2.6
30°
2
1.3
9
10.3
1