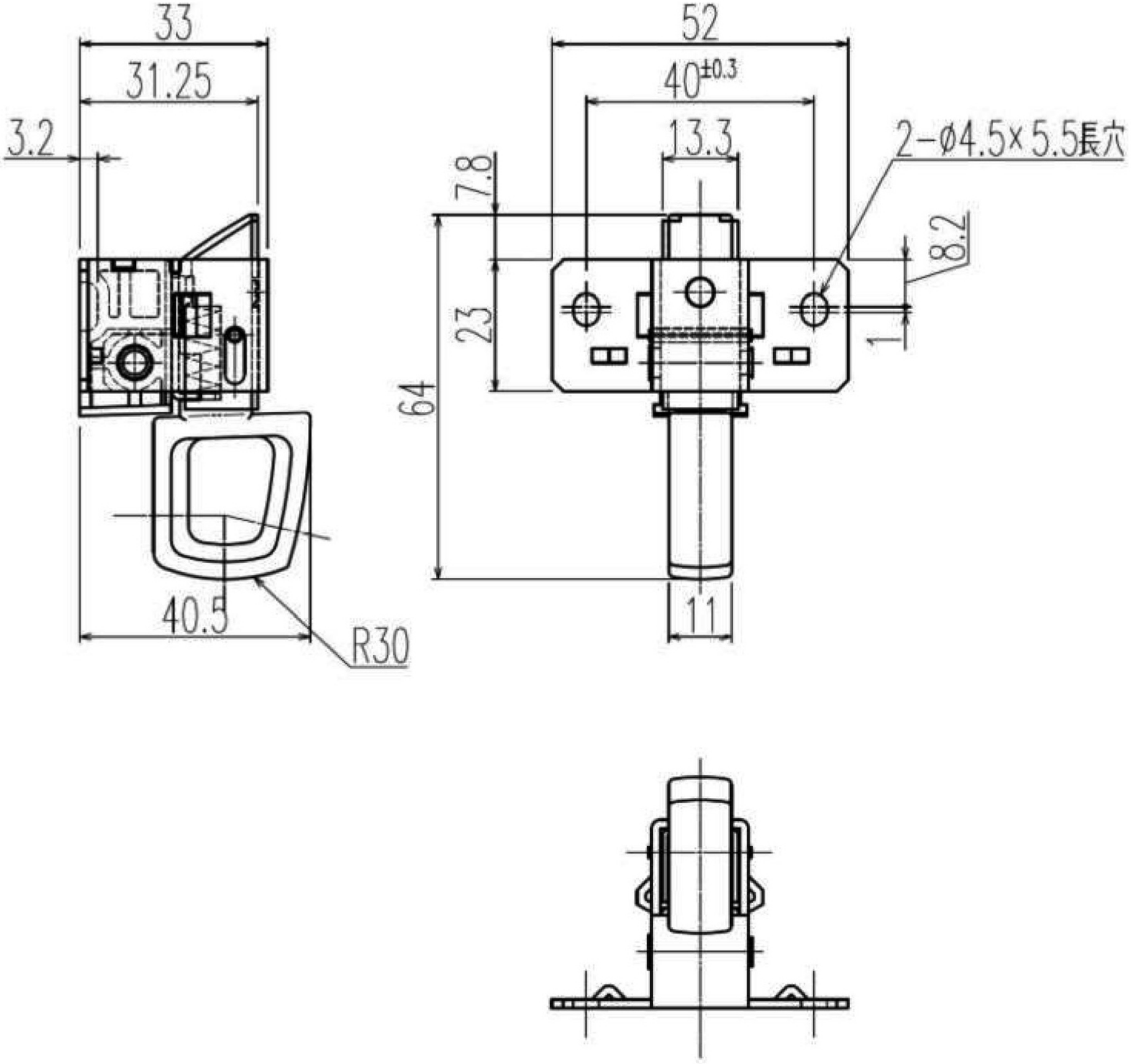
33
31.25
3.2
40.5
R30
52
40±0.3
13.3
2-φ4.5×5.5長穴
7.8
8.2
23
1
64
11

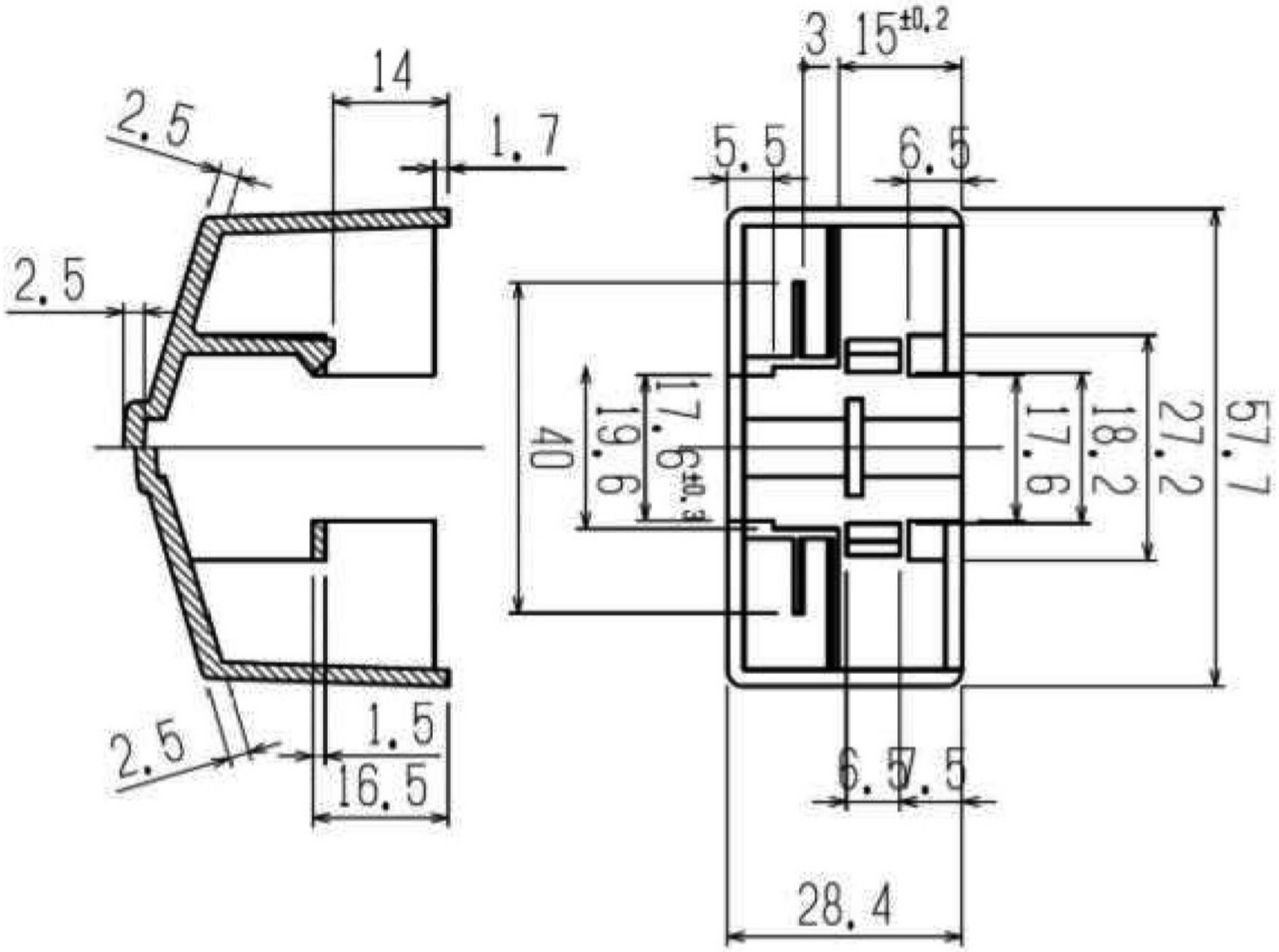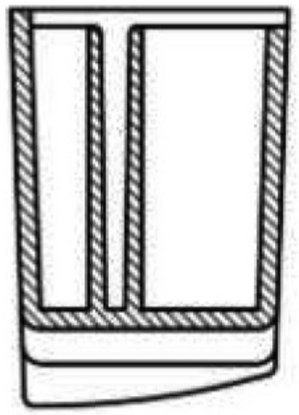
14
2.5
1.7
2.5
2.5
1.5
16.5
3
15±0.2
5.5
6.5
40
17.6±0.3
19.6
17.6
18.2
27.2
57.7
6.5
7.5
28.4