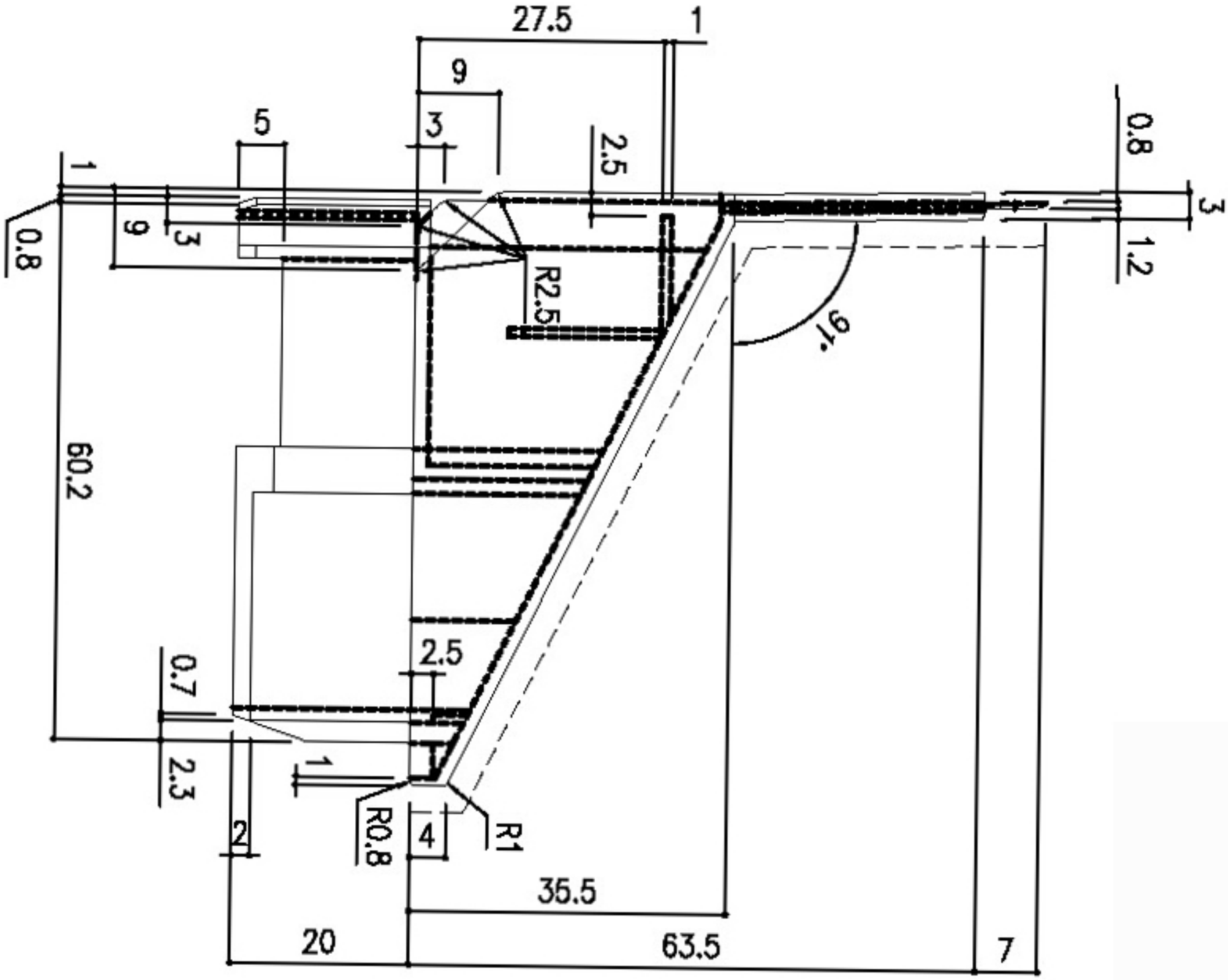
27.5
1
9
5
3
2.5
0.8
3
1.2
1
0.8
9
3
R2.5
97°
60.2
2.5
0.7
2.3
1
2
R0.8
4
R1
35.5
20
63.5
7

R0.8
R1
R1
稜線部R0.5
2
0.8
0.7
36.4
0.7
R0.8
R1
R1
3.5
22.8
4.7
6
18.4
7.7