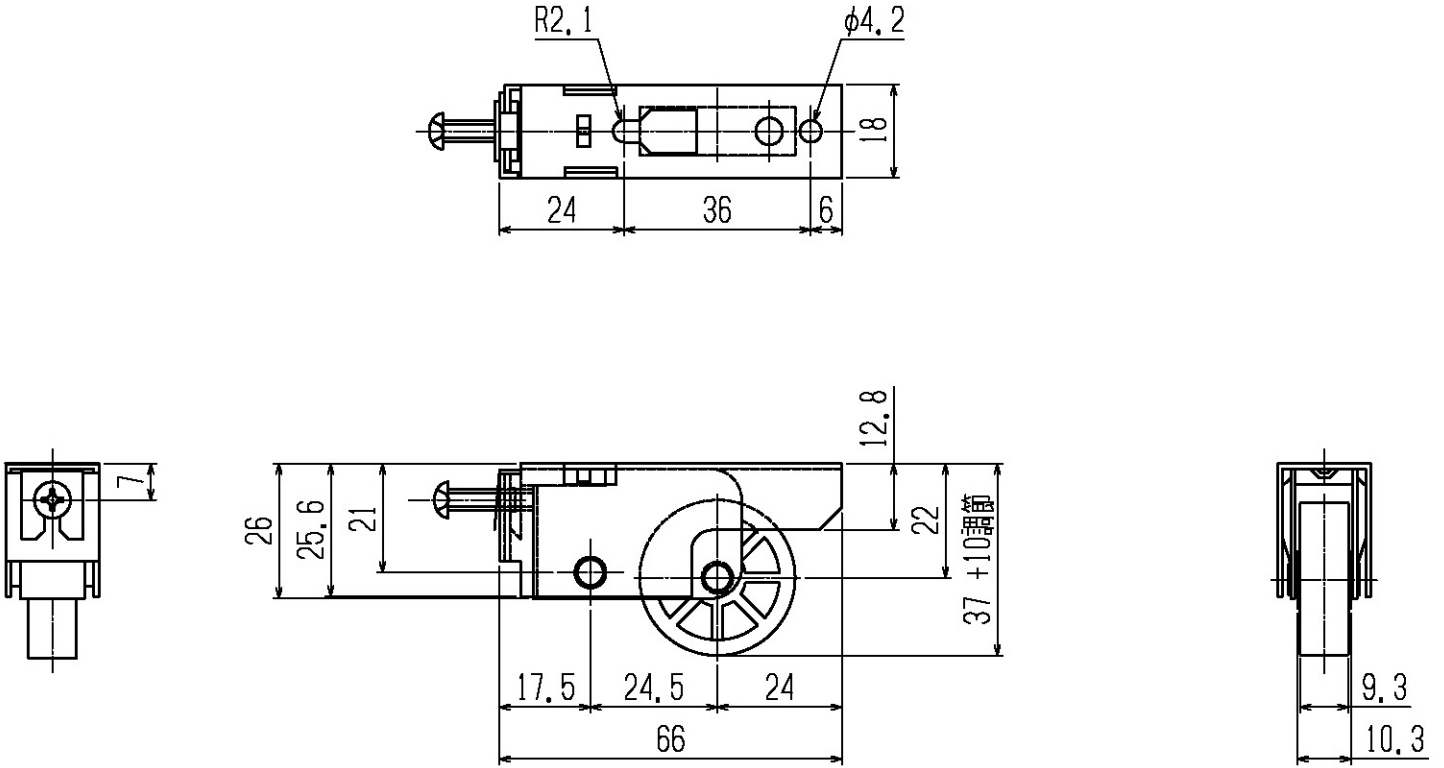
R2.1
φ4.2
18
24
36
6
7
26
25.6
21
12.8
22
37 +10調節
17.5
24.5
24
66
9.3
10.3