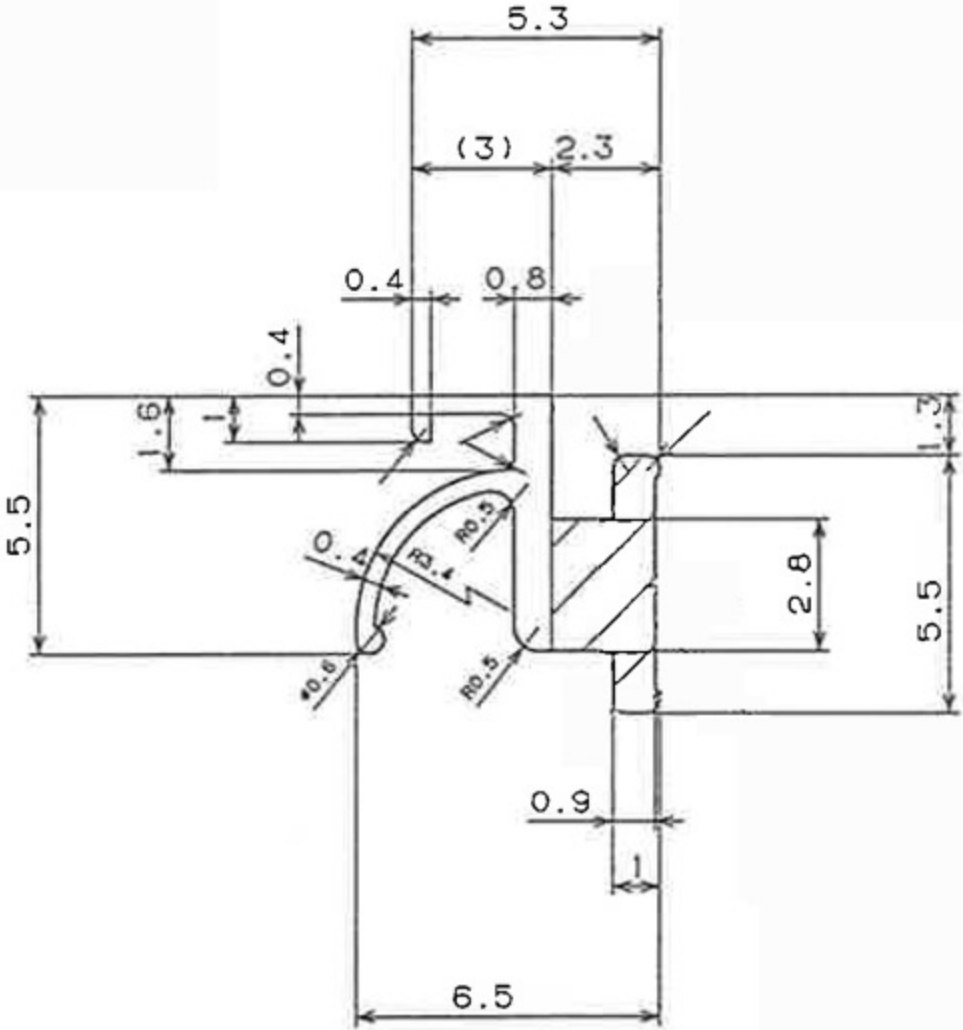
5.3
(3)
2.3
0.4
0.8
0.4
1.6
1
1.3
5.5
0.4
R0.3
R3.4
2.8
5.5
φ0.6
R0.5
0.9
1
6.5