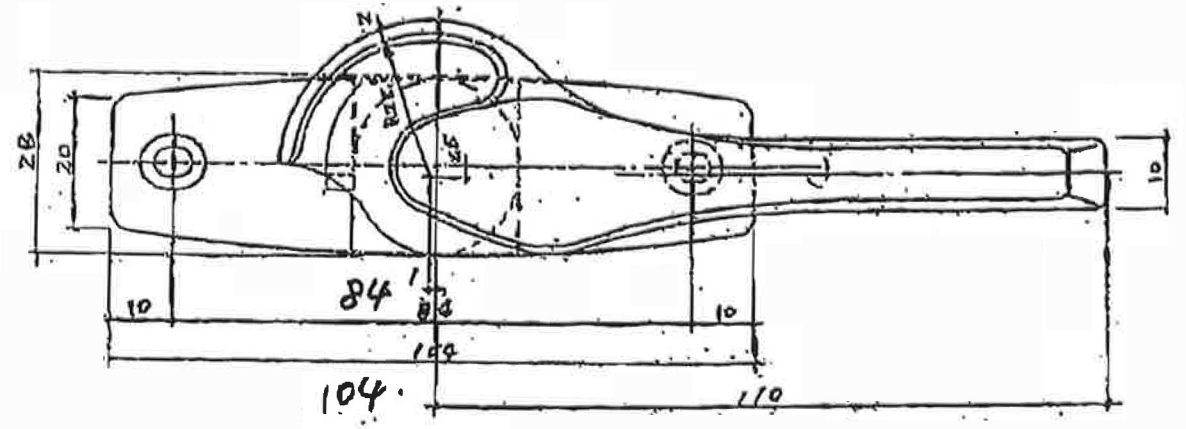
28
20
10
84
10
10
100
104
110

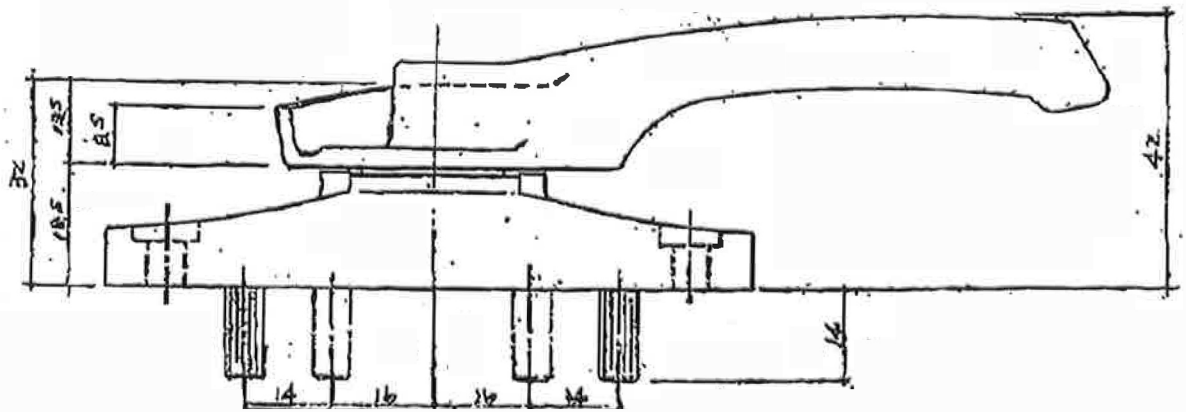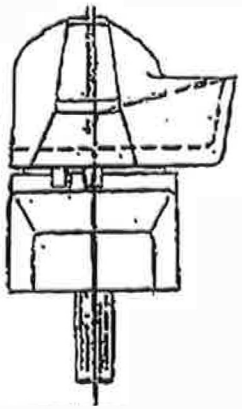
37
12.5
8.5
18.5
42
14
16
16
14