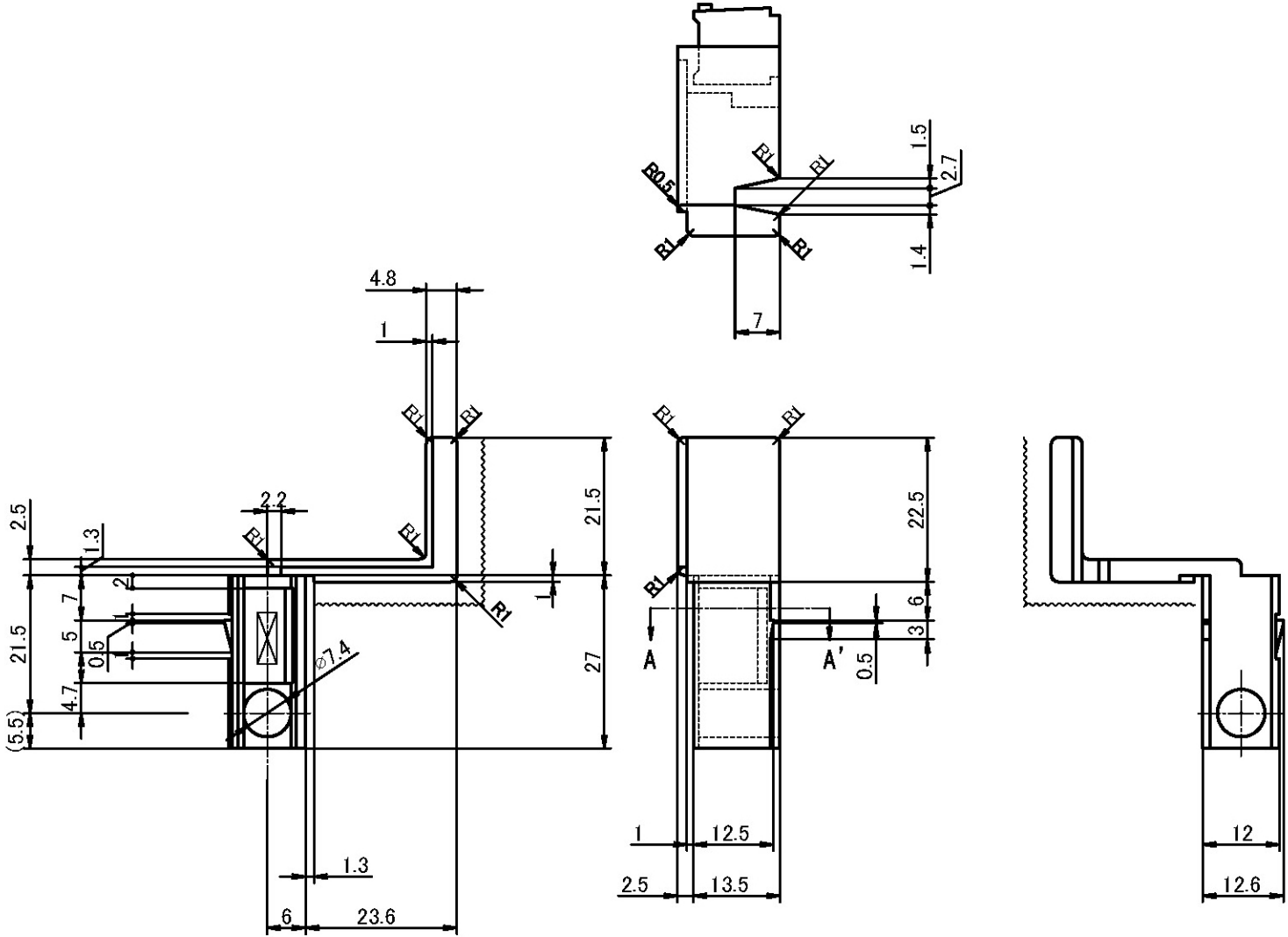
4.8
1
R1
R1
R1
R1
R1
R1
R1
R1
R1
R0.5
R1
R1
1.5
2.7
1.4
7
2.5
1.3
2.2
7
2
5
0.5
21.5
4.7
(5.5)
φ7.4
21.5
1
27
1.3
6
23.6
22.5
6
3
0.5
A
A'
1
12.5
2.5
13.5
12
12.6